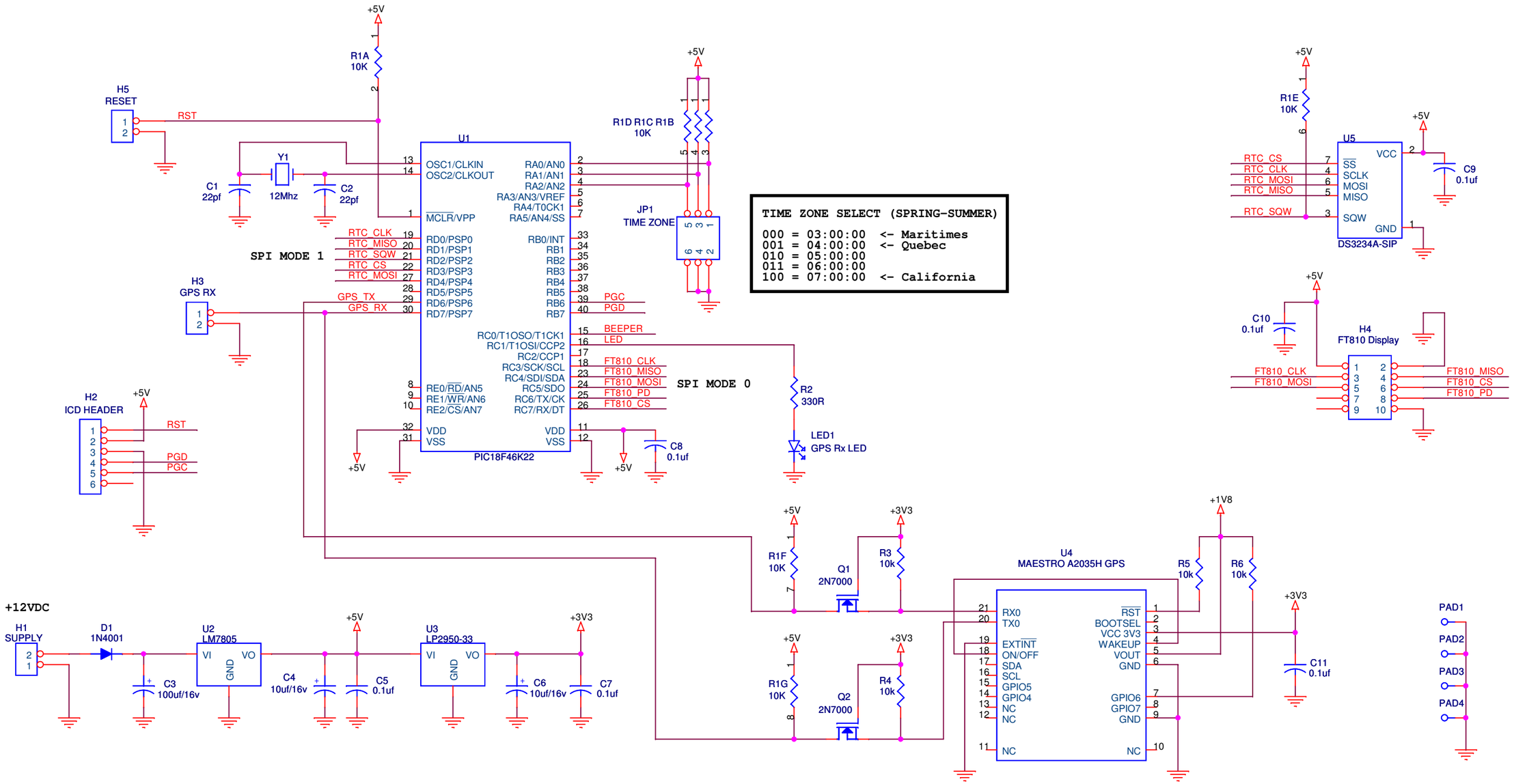


| | | |
|---|---|---|
| Title | **Calendrier FT810** | |
| Size | Document Number **ArcEnSon** | Rev JPD |
| Date: Thursday, April 30, 2020 | Sheet 1 of 1 | |