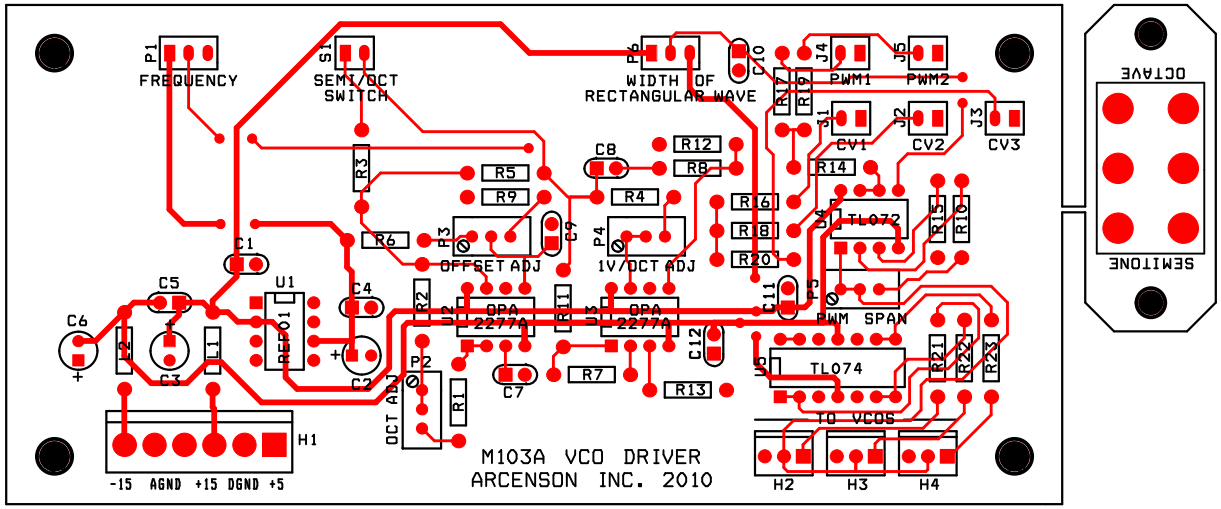
P1
FREQUENCY
S1
SEMI/OCT
SWITCH
P6
WIDTH OF
RECTANGULAR WAVE
C10
R17
R19
J4
PWM1
J5
PWM2
J1
CV1
J2
CV2
J3
CV3
R14
R12
R8
C8
R5
R9
R4
R3
R6
P3
OFFSET ADJ
C9
P4
1V/OCT ADJ
R16
R18
R20
J6
TL072
R15
R10
C1
C5
U1
REF01
C4
C6
L2
C3
L1
C2
R2
J2
OPA
2277A
R11
J3
OPA
2277A
C11
P5
PWM SPAN
C12
J5
TL074
R21
R22
R23
P2
OCT ADJ
R1
C7
R7
R13
TO VCOS
H1
-15 AGND +15 DGND +5
M103A VCO DRIVER
ARCENSON INC. 2010
H2
H3
H4
OCTAVE
SEMITONE