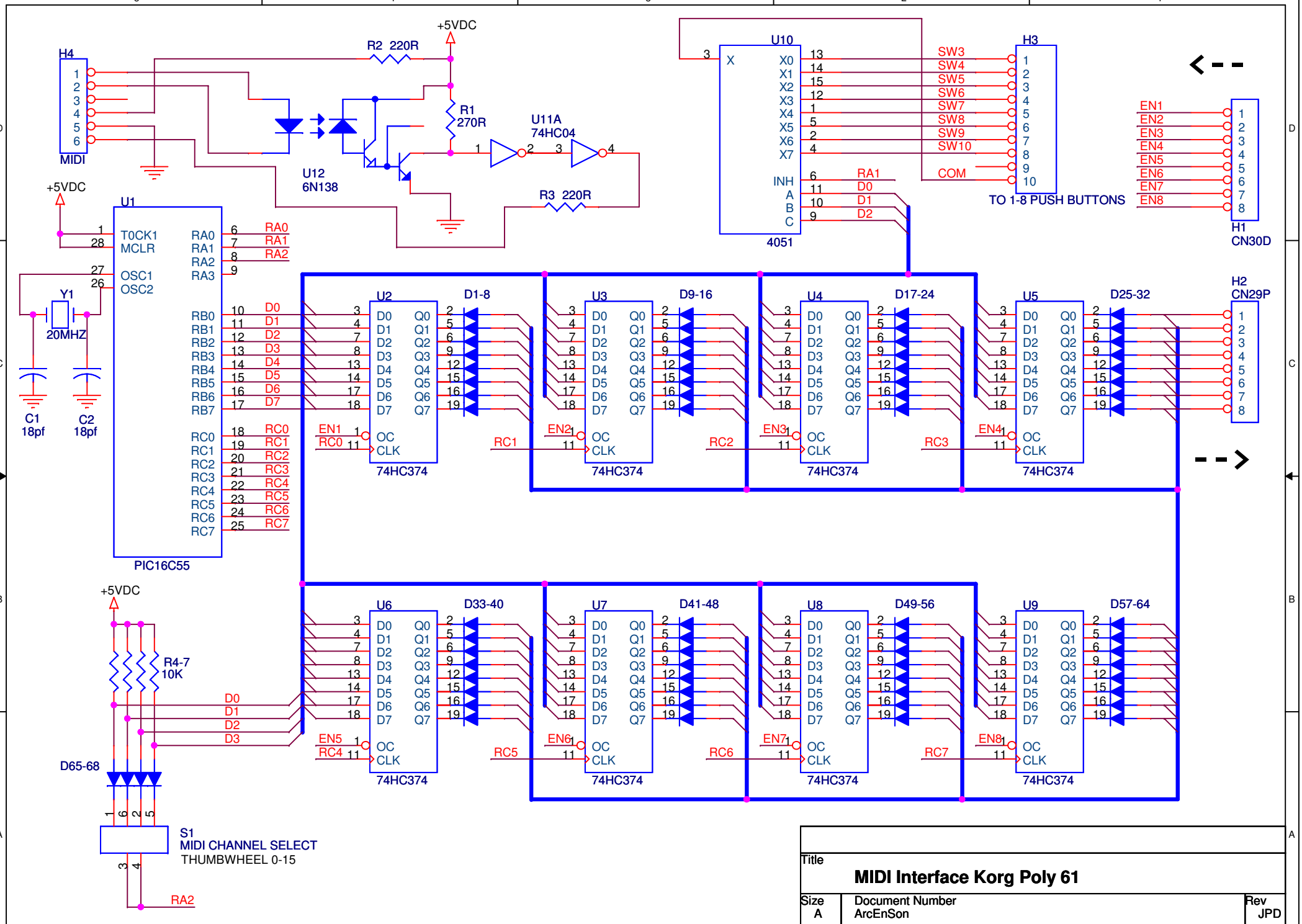
H4
MIDI
+5VDC
R2 220R
R1
270R
U12
6N138
U11A
74HC04
R3 220R
U10
4051
SW3
SW4
SW5
SW6
SW7
SW8
SW9
SW10
COM
RA1
D0
D1
D2
H3
TO 1-8 PUSH BUTTONS
EN1
EN2
EN3
EN4
EN5
EN6
EN7
EN8
H1
CN30D
U1
PIC16C55
T0CK1
MCLR
OSC1
OSC2
RA0
RA1
RA2
RA3
RB0
RB1
RB2
RB3
RB4
RB5
RB6
RB7
RC0
RC1
RC2
RC3
RC4
RC5
RC6
RC7
Y1
20MHZ
C1
18pf
C2
18pf
U2
U3
U4
U5
U6
U7
U8
U9
74HC374
D1-8
D9-16
D17-24
D25-32
D33-40
D41-48
D49-56
D57-64
H2
CN29P
R4-7
10K
D65-68
S1
MIDI CHANNEL SELECT
THUMBWHEEL 0-15
Title
MIDI Interface Korg Poly 61
Size
A
Document Number
ArcEnSon
Rev
JPD
Date:
Sunday, June 20, 2021
Sheet
1
of
1